Active Battery Management Systems and High Power Density Switched Capacitor Converters

ECE 590 Seminar

Derek Heeger

Andrew Stillwell

Robert Pilawa-Podgurski

Outline

- Dickson Switched Capacitor Converter
  - Motivation
  - Capacitors Versus Inductors
  - Interleaved Dickson
  - Experimental Results

- Battery Management Systems
  - Motivation
  - System overview
    - Passive
    - Active
  - Hardware

Motivation

- Use Capacitors for High Voltage Step Up Conversion
- Pulsed Power Applications
  - Particle Accelerators
  - Very Strong Magnetic Fields
  - Fusion Research
  - Lasers
  - Water Purification
  - Radar

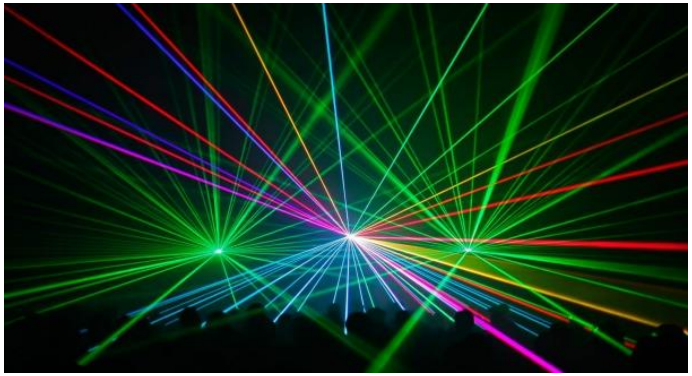

Switched-inductor vs. Switched-capacitor

- Switched-inductor converters
  - Simple and robust
  - Wide input/output voltage range
  - High device stress
  - Inductor is bulky

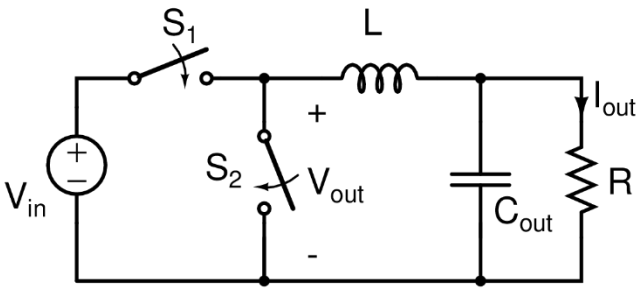

- Switched-capacitor converters
  - Low device stress
  - Capacitors have large energy density
  - Large number of components

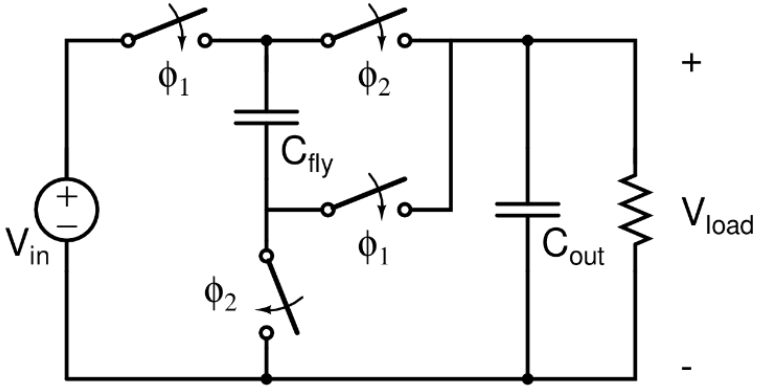

Energy Density Comparison

- Desire to create high power density converters
- Capacitors have greatly superior energy density

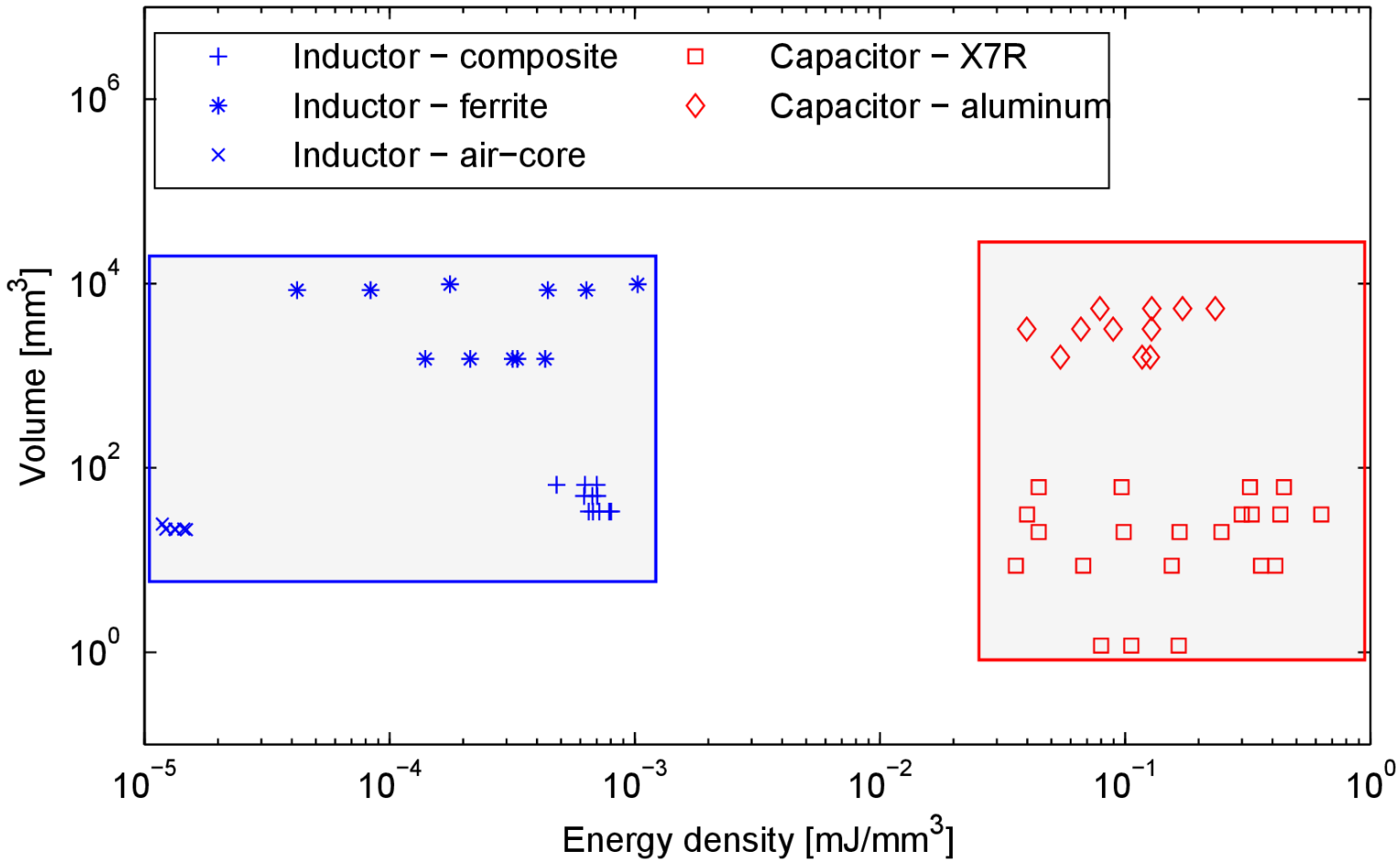

The Dickson SC Converter

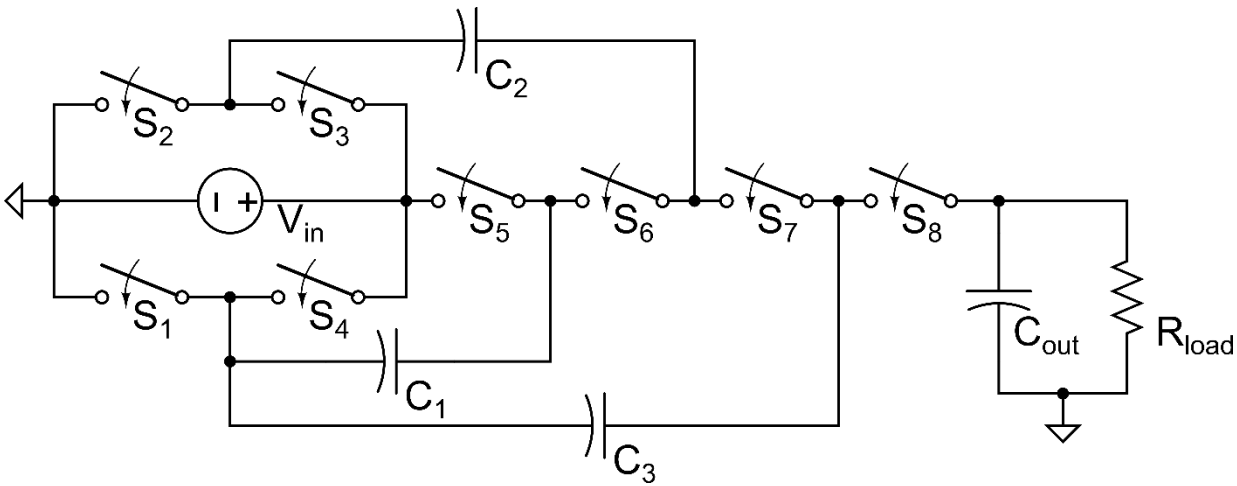

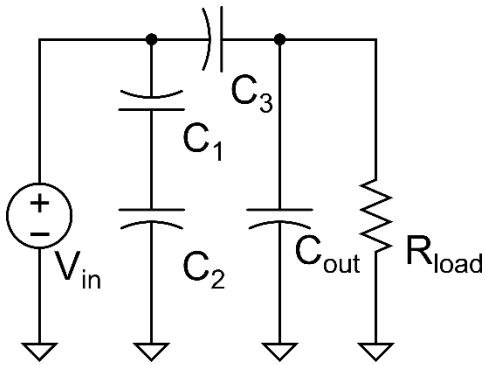

Phase 1

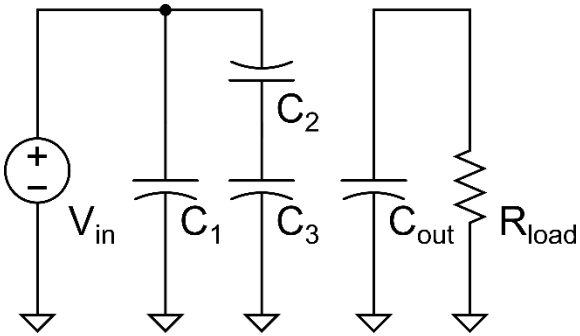

Phase 2

- Switched-capacitor converters
  - ✓ Lower device stress
  - ✓ Capacitors have high energy density
  - × Large number of components
  - × Fixed conversion ratios

- Converter characteristics
  - Low switch stresses: rated for V_{in} (S_1-S_5, S_8) or 2 x V_{in} (S_6, S_7)
  - Capacitor ratings: $V_{C_1} = V_{in}$, $V_{C_2} = 2 \times V_{in}$, $V_{C_3} = 3 \times V_{in}$

Design Goals

- Demonstrate a larger step up – 1:6, 35 V to 210 V
  - Leverage work on Dickson Split-Phase
- Achieve higher power density
  - Achieved through interleaving multiple stages
- Resonance

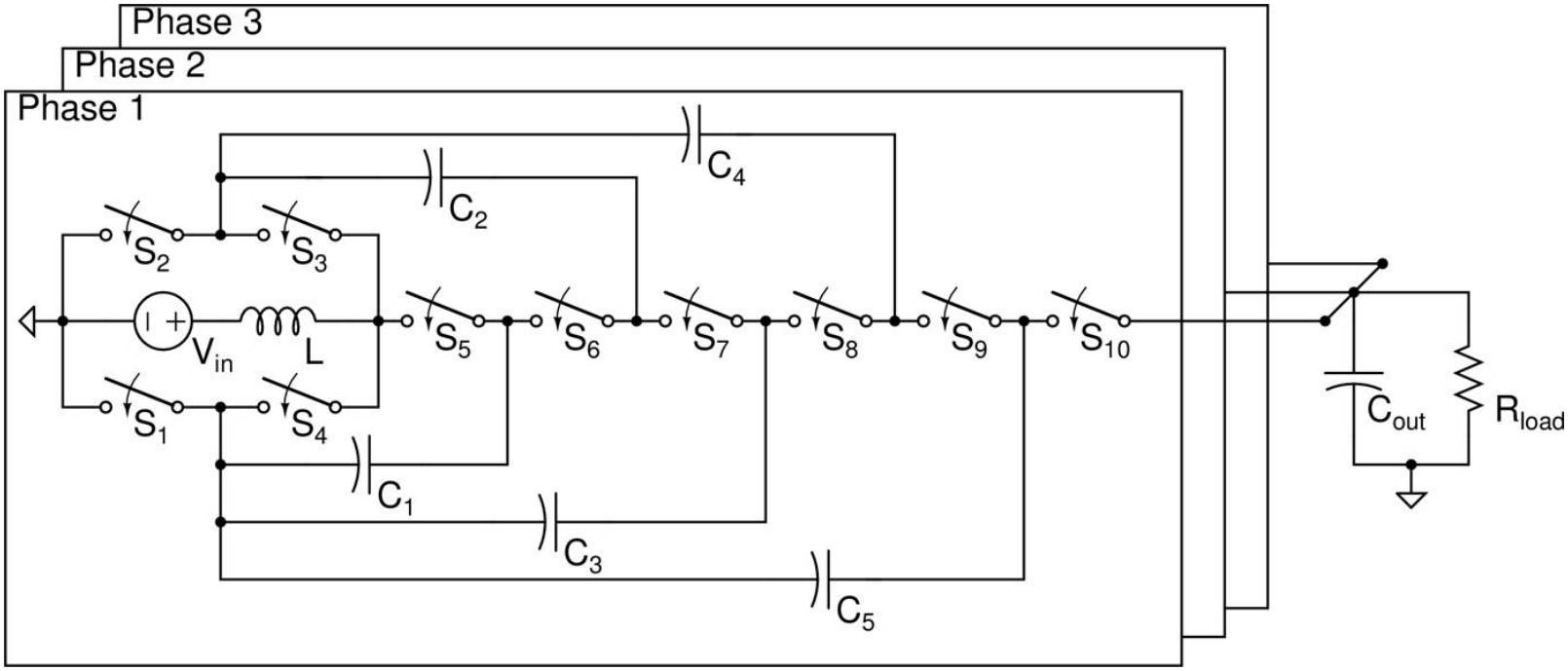

Current Hardware Implementation

- Two phase interleaved converter with split phase control

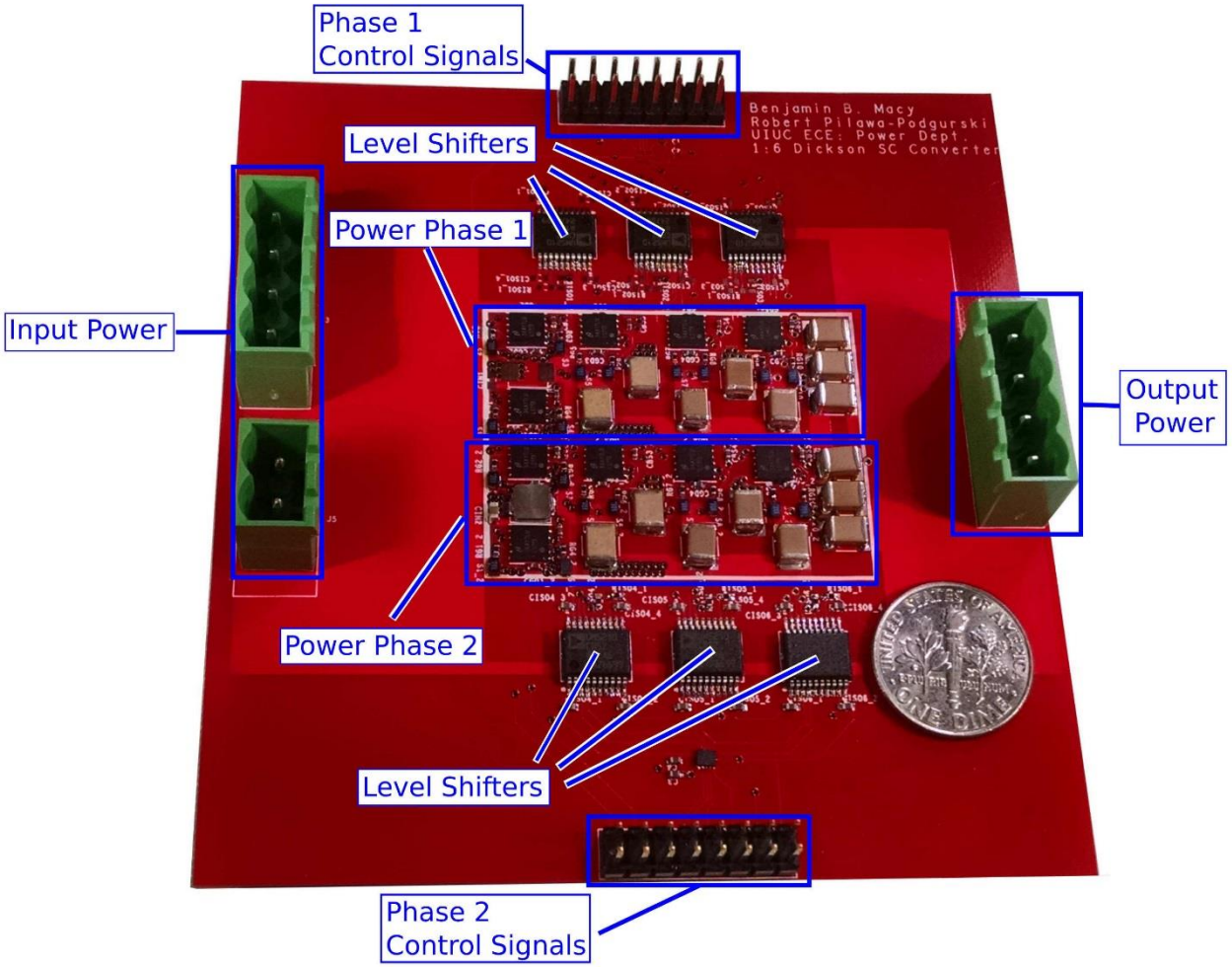

Results

- Achieved 25 V to 150 V operation
- Demonstrated interleaved resonant operation at 200 kHz
- Observed excellent current sharing between phases

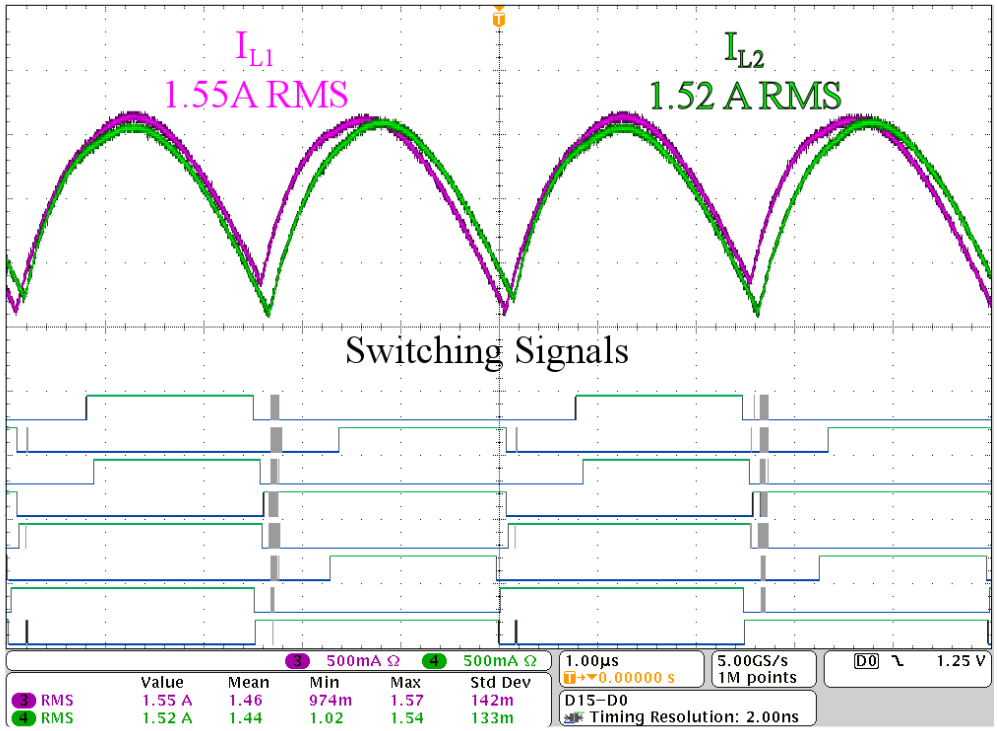

Results (continued)

- Reached peak efficiency of 95.7% for single phase, 95.6% for two phase
- Reached peak single phase power of 40 W, 60 W for two phases

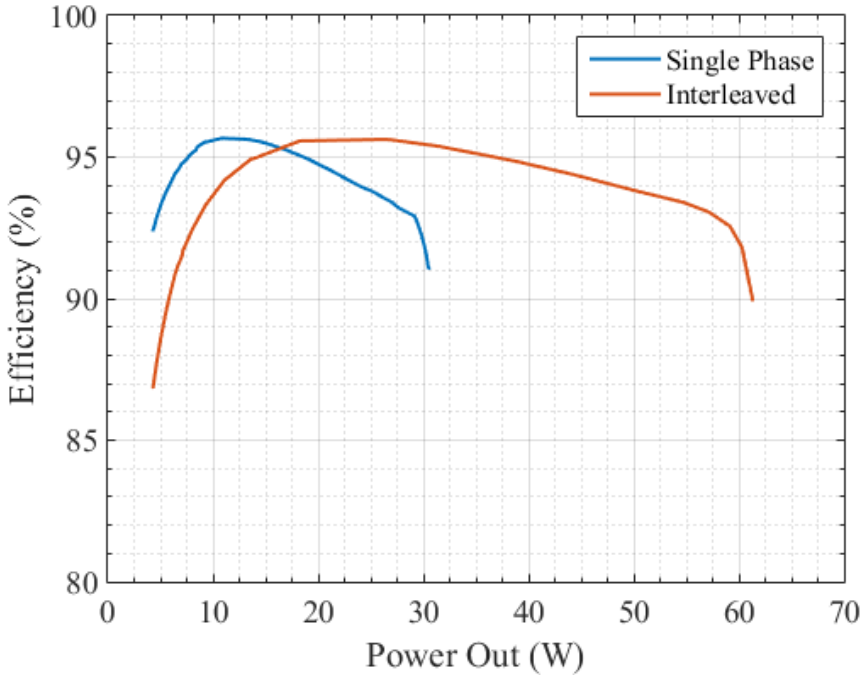

Battery Management Systems

- Lithium-Ion Battery Packs
  - Strings of many cells
- Battery Management Systems
  - Monitor cell voltages
  - Protect cells from over voltage, under voltage, and over current
  - State of Health (SOH)
  - State of Charge (SOC)
  - **Cell balancing**

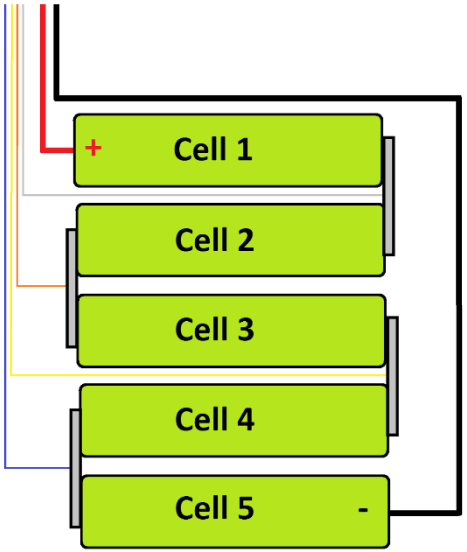

Why We Care!

Passive Battery Management System

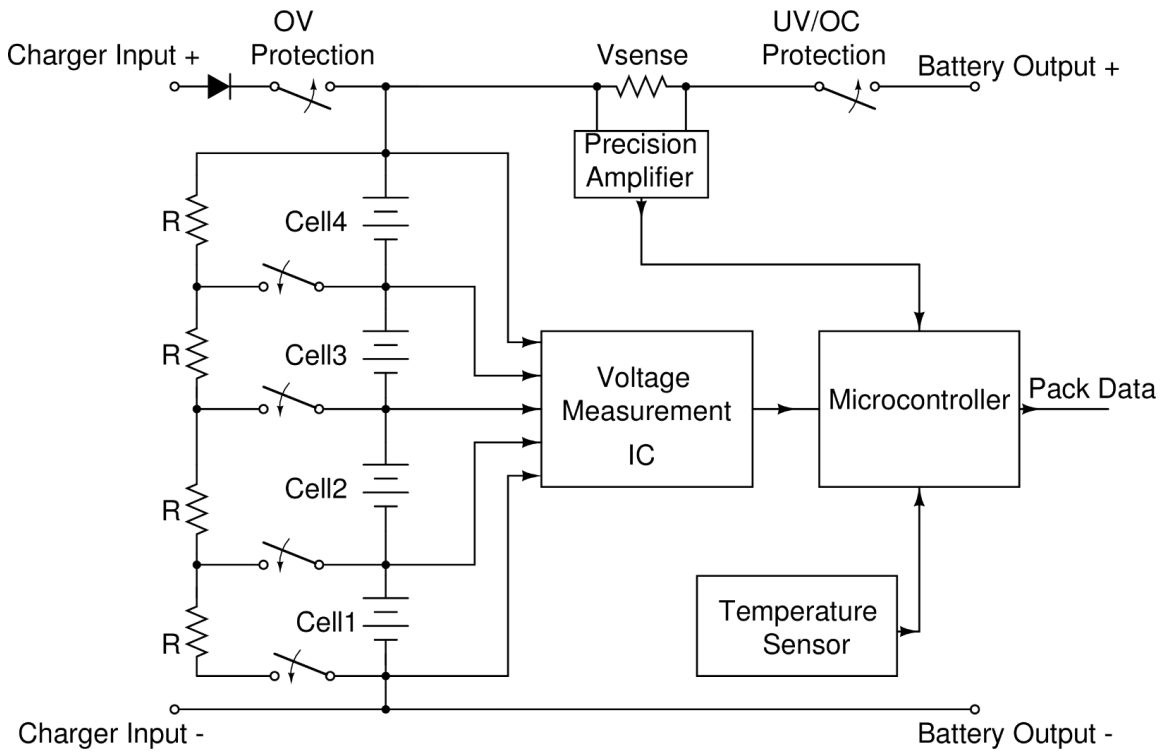

- ✓ Easy to implement
- ✓ Easy to control
- ✓ Cheap
- X High heat dissipation
- X Slow charging
- X Inefficient

Battery To Pack – Unidirectional or Bidirectional

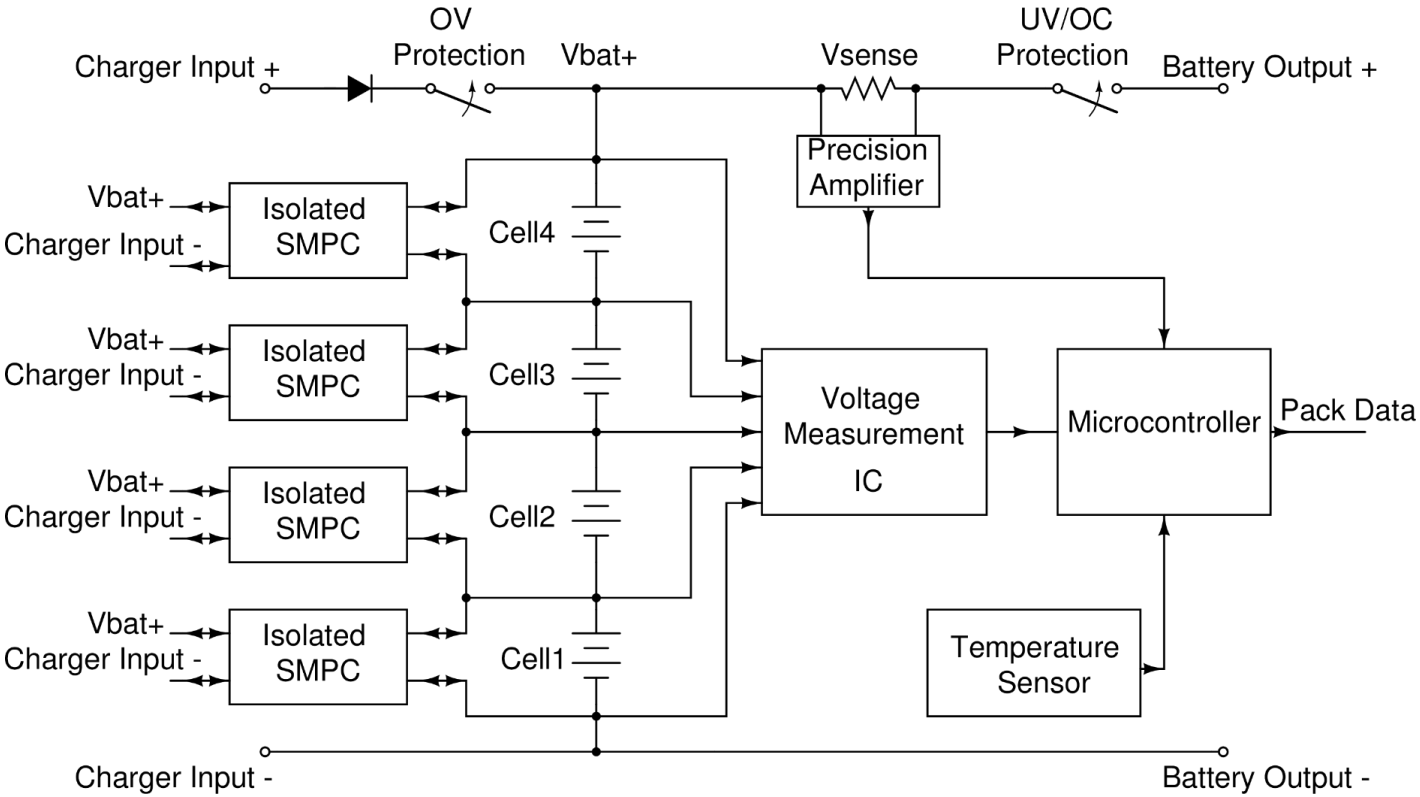

- ✓ Extremely fast charging
- ✓ Extremely efficient
- ✓ Little heat dissipation
- X Complex SMPC
- X Very complex control
- X Isolated Communication

Charge Every Battery Cell Individually

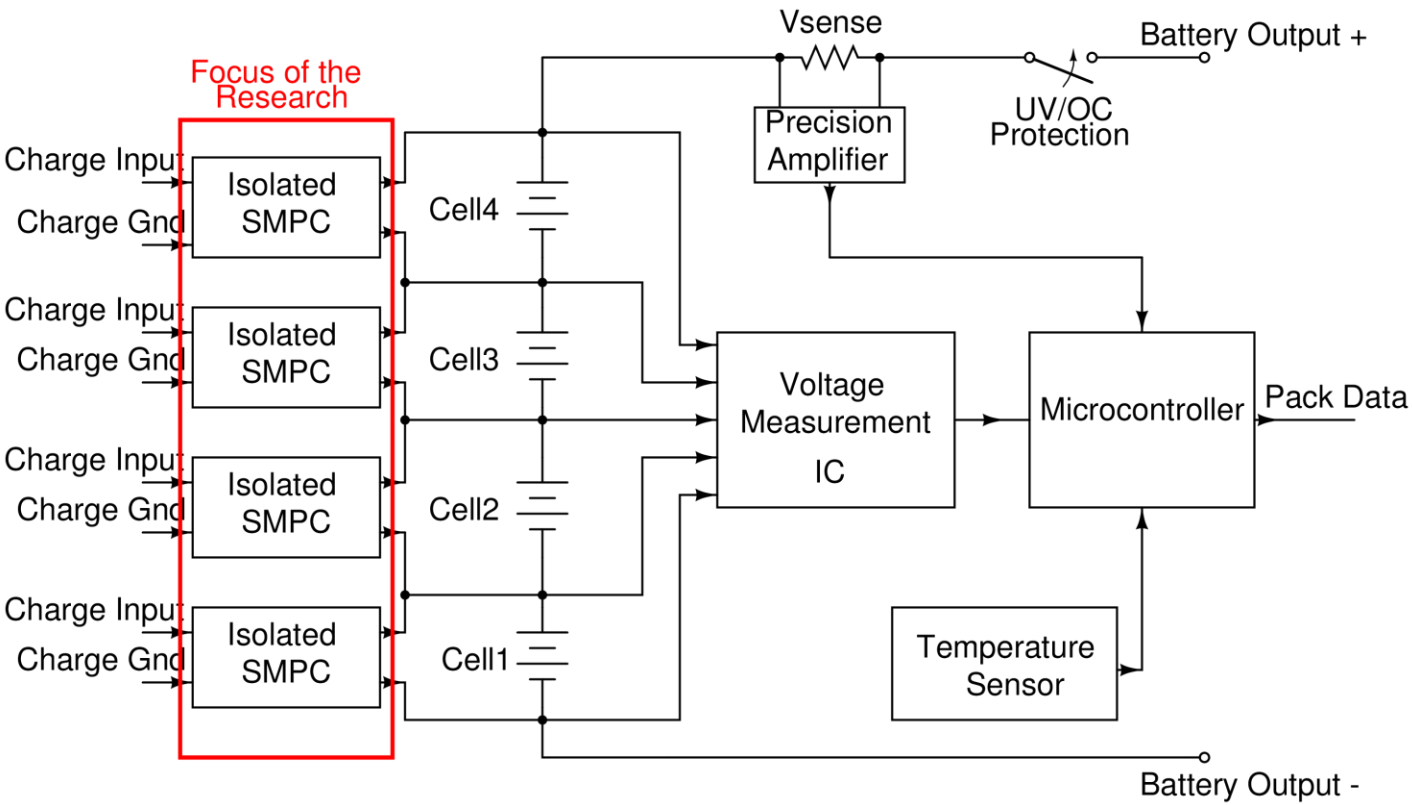

- ✓ Extremely fast charging
- ✓ Easy to control
- ▪ Moderate heat dissipation
- ▪ Moderately efficient
- X Complex SMPC
- X Single point failure

Forward Converter with Planar Magnetics

- Forward Converter
  - Two modes of operation
    - S1 on
    - S2 on
  - Duty cycle determines output voltage
- Planar Magnetics
  - Transformer windings in PCB

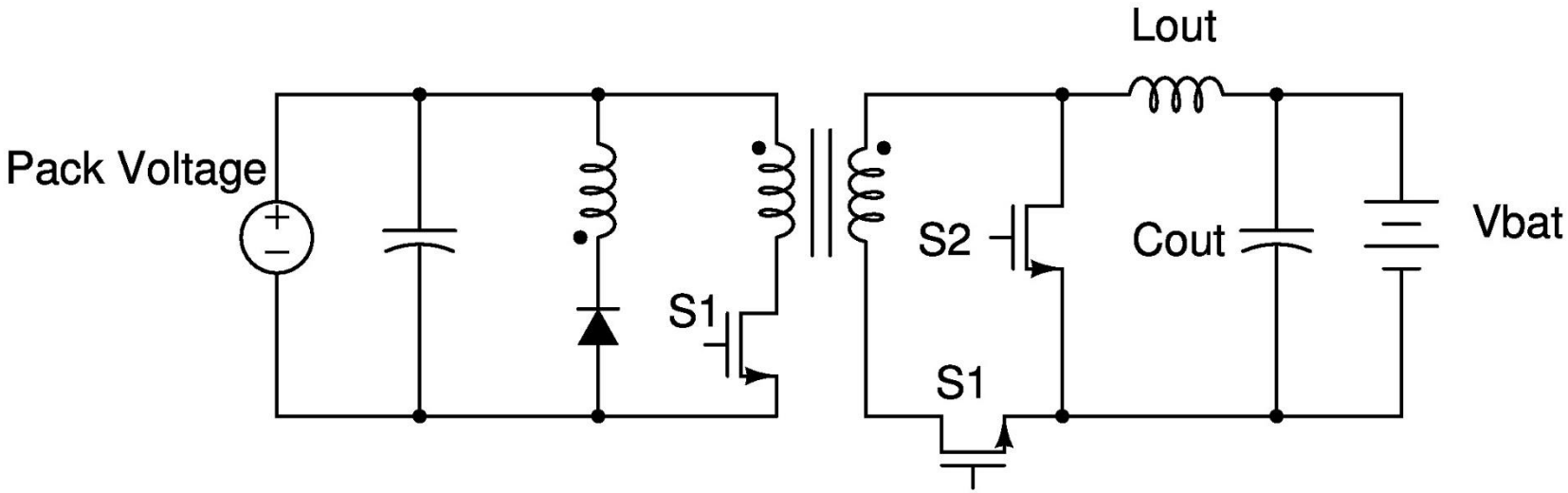

Forward Converter

- Switching at 1-2 MHz
- GaN Switches
- Planar Magnetics
- Current and Voltage Controlled

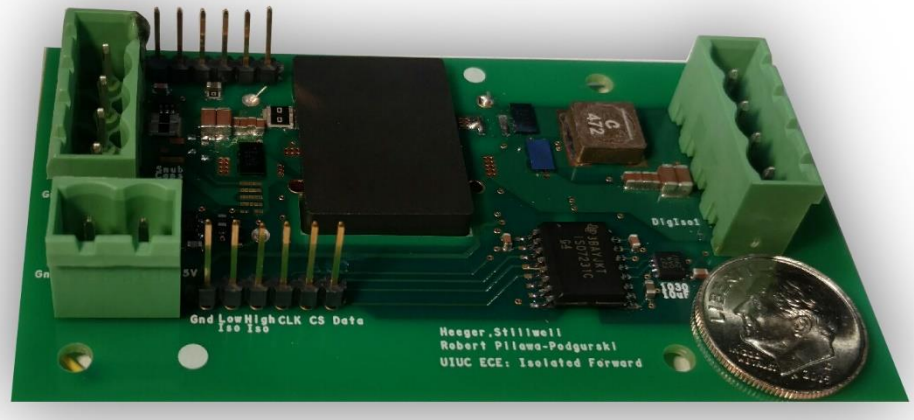

Conclusion

- High Power Density Switched Capacitor Converter
- Active Battery Management System

- Acknowledgments
  - Sandia National Labs
  - Army Research Lab
  - Ben Macy
  - Minjie Chen

Questions